BELTEK®

DESPIECE DE LA HERRAMIENTA

Usted encontrará con un círculo las piezas de desgaste recomendadas para mantener en stock.

CMB-SA-35

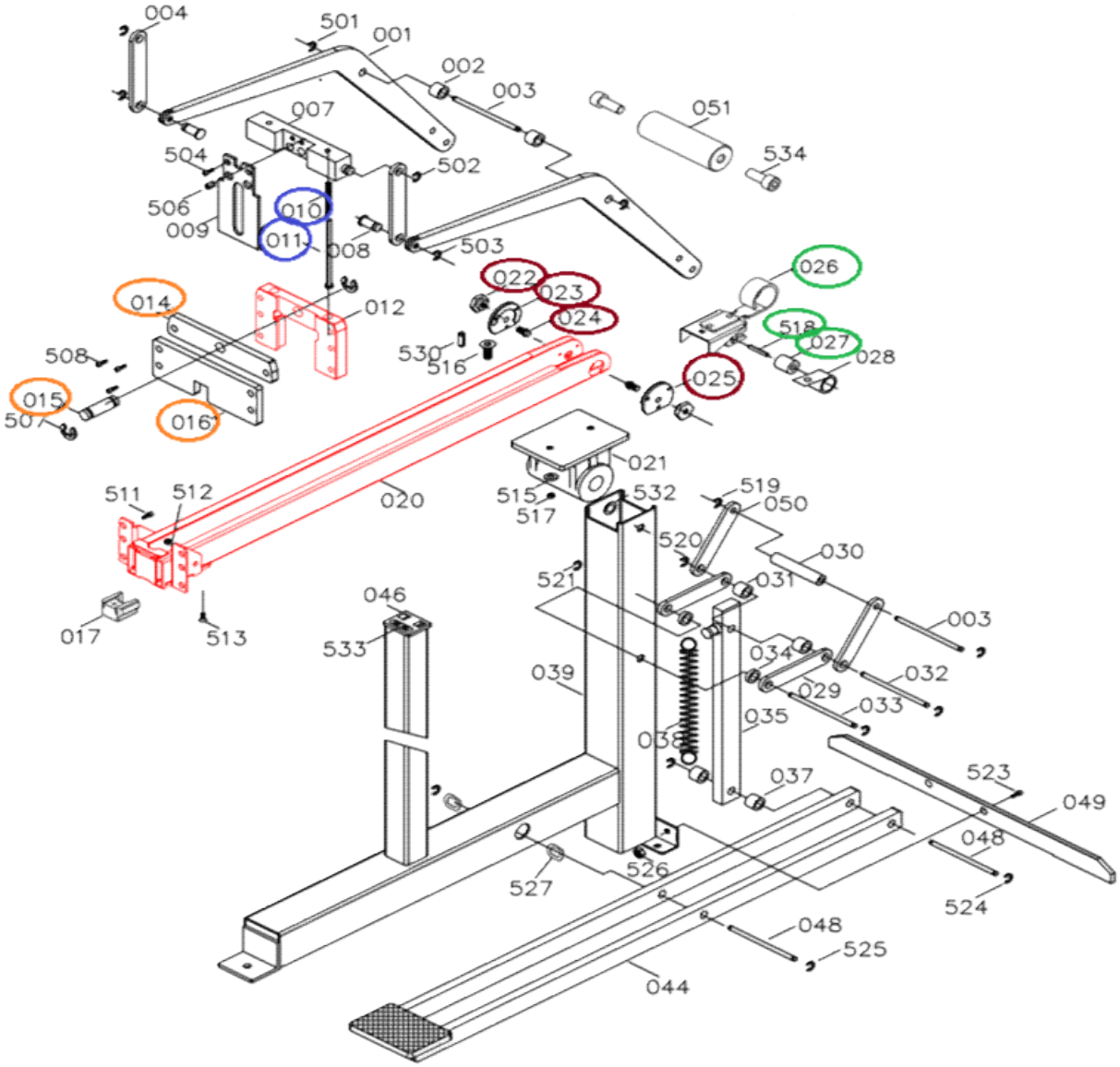

Kit A - Kit del empujador

Kit C - Kit del cabezal

Kit E - Kit del perno y resorte del cabezal

Kit D- Kit de las guías del carro

BELTEK®

DESPIECE DE LA

Propiedad de: Implementos Neumáticos SA de CV **CONFIDENCIAL**

Prohibida la reproducción parcial o total

LISTA DE PARTES

MODELO: CMB-SA-35

Item	Part No.	Description	Q'ty	Specification	P. Lista
001	A00600104	LINK 1	2		1,272.51
002	A00603401	TUBE	2		95.41
003	A00603201	SHAFT E	2		152.65
004	A00600401	LINK 2	2		63.21
007	A00600703	DRIVER SEAT	1		725.10
008	A00600801	SHAFT C	2		133.57
009	A00600904	DRIVER	1	35	381.63
009	A00600905	DRIVER	1	32	381.63
012	A00601208	MAGAZINE SEAT	1	35	2,035.78
017	A00607501	BRACKET	1		206.32
020	CMB-S-32-P3-SA	MAGAZINE UNIT	1	32	3,264.16
020	CMB-S-35-P3-SA	MAGAZINE UNIT	1	35	3,264.16
021	A00602101	BRACKET SET	1		628.50
026	A00103710A	PUSHER SET	1	32	422.18
028	A00602801	SPRING	1		228.98
029	A00602901	LINK 3 -A	2		143.11
030	A00603002	TUBE	1		238.52
031	A00603701	TUBE	2		143.11
032	A00603202	SHAFT E	1		152.65
033	A00603302	SHAFT F	1		133.57
034	A00603402	TUBE	2		66.79
035	A00603503A	LINK 4 SET	1		1,230.77
037	A00603701	TUBE	2		143.11
038	A00603801	SPRING	1		381.63
039	A00603904A	BODY SET	1		8,816.92
044	A00604402A	STEP BOARD SET	1		3,160.40
046	A00604607	MOLD	1		286.23
048	A00604801	SHAFT G	2		143.11
049	A00604901	BALANCER	1		775.19
050	A00602903	LINK 3 -C	2		143.11
051	A00608201	SHAFT	1		318.43
501	BAF11002	E-RING	2	φ10	19.67
502	BAF10502	E-RING	2	φ5	19.67
503	BAF10502	E-RING	2	φ5	19.67
504	BAC0604102	HEX.SOC.HD.BOLT	2	M4 x 0.7-10	19.67
506	BAA060016	SPRING PIN	2	φ6-16	19.67
507	BAF10602	E-RING	2	φ6	19.67

Item	Part No.	Description	Q'ty	Specification	P. Lista
508	BAC0605102	HEX.SOC.HD.BOLT	6	M5 x 0.8-10	19.67
511	BAC0605082	HEX. SOC. HD. BOLT	6	M5x0.8-8	19.67
512	BAD01041	LOCK NUT	1	M4 x 0.7	19.67
513	BAC0204222	HEX.SOC.FLAT COUNTER	1	M4 x 0.7-22	19.67
515	BAE01052	SPRING WASHER	2	φ5	19.67
516	BAC0205162	HEX.SOC.FLAT COUNTER	2	M5 x 0.8-16	19.67
517	BAD02051	LOCK NUT	2	M5 x0.8	19.67
518	BAA040016	SPRING PIN	1	φ4-16	19.67
519	BAF11002	E-RING	2	φ10	19.67
520	BAF11002	E-RING	2	φ10	19.67
521	BAF11002	E-RING	2	φ10	19.67
523	BAC0408202	HEX.SOC.HD.BOLT	2	M8 x 1.25-20	19.67
524	BAF11002	E-RING	2	φ10	19.67
525	BAF11002	E-RING	2	φ10	19.67
526	BAD01081	LOCK NUT	2	M8 x1.25	19.67
527	BAE03122	WAVE WASHER	2	φ12.5 xφ17	19.67
530	BAA040008	SPRING PIN	4	φ4-8	19.67
532	BAE03142	WAVE WASHER	2	φ14.5 xφ21	19.67
533	BAC0904082	HEX.SOC.ROUND.HD.SCREW	2	M4 × 0.7-8	19.67
534	BAC0608202	HEX.SOC.HD.BOLT	2	M8 x 1.25-20	19.67
KIT A		**KIT DE EMPAQUES**			
026	A00103709	PUSHER SET	1	35	462.95
027	A00103501	ROLLER	1		
518	BAA040016	SPRING PIN	1	φ4-16	
KIT E		**KIT DE PERNO Y RESORTE DEL CABEZAL**			
010	A00601002	SPRING	2		432.40
011	A00601103	SPRING SHAFT	2		
KIT C		**KIT DE CABEZAL**			
014	A00601405	COVER B	1		901.23
015	A00601502	SHAFT D	1		
016	A00601605	COVER A	1		
KIT D		**KIT DE GUIAS DEL CARRO**			
022	A00607101	NUT	2		227.95
023	A00103903	RIGHT PUSHER GUIDE	1		
024	A00103203	ROD	2		
025	A00103904	LEFT PUSHER GUIDE	1		

*Precios en moneda nacional